User's Manual Of V 1.0
DU-CJ500-2

THANK YOU!

Thank you for purchasing this vehicle. Before you drive the vehicle, please read this Owner's Guide. This guide contains maintenance and operation information. The illustrations can show items that are optional for your vehicle.

You can do most of the service procedures in this guide with common automotive hand tools. If necessary, contact your service representative for information about how to service the vehicle as shown in the Periodic Service Schedule.

Repair or replacement parts are available from your dealer or Service Parts Department.

When you contact about service or parts for your vehicle, the information below is needed.

Vehicle Model: _____

PIN, VIN or Serial Number: _____

Read all of this manual to become thoroughly familiar with this vehicle. Particularly important information is emphasized in this manual.
The use of non Original Equipment Manufacturer (OEM) approved parts may void the warranty.
Tampering with or adjusting the governor to permit vehicle to operate at above factory specifications will void the vehicle warranty.

USER'S MANUAL OF ELECTRIC POWERED VEHICLES DU-CJ500-2

⚠ WARNING

1、This electric vehicle must be driven by a professionally trained driver!

2、The accelerator pedal and the brake pedal cannot be pressed at the same time, otherwise the control system will be damaged and the motor will burn out!
When the vehicle starts, the parking brake must be released. Otherwise, the brake system may cause permanent damage and damage other parts!

3、Vehicles are not allowed to be modified. Modifications may affect vehicle performance, vehicle life, and even affect vehicle safety and may violate regulations. Vehicle damage caused by vehicle modification is not within the scope of "Three Guarantees" policy!

4、Unreasonable installation of electrical equipment on the vehicle, such as alarm devices, car phones, etc., may interfere with the vehicle's control system electrical signals, affecting vehicle performance. When installing such equipment, you should consult our company!

5、Due to product improvements, the contents of this manual may differ from the actual situation!

6、This product is a dedicated motor vehicle in the specific area (factory) specified in the Special Equipment Safety Supervision Regulations!It is strictly forbidden to drive after drinking. It is strictly prohibited to overload!

TABLE OF CONTENTS

SAFETY INFORMATION

IMPORTANT SAFETY INFORMATION 1
VEHICLE SAFETY LABELS 2
BATTERY SAFETY INFORMATION 6
LITHIUM-ION BATTERY RECYCLING 7

VEHICLE SERIAL NUMBER LOCATION

VEHICLE SERIAL & VIN NUMBER 8

VEHICLE FEATURES

VEHICLE OVERVIEW 9

OPERATION AND CONTROLS

SAFETY INFORMATION 14
PRE-OPERATION SAFETY AND PERFORMANCE INSPECTION 15

TOUCHSCREEN MANUAL

TOUCHSCREEN OVERVIEW 16

TABLE OF CONTENTS

BATTERY CHARGER

Charger User Manual 18

WHEELS & TIRES.....21

VEHICLE MAINTENANCE

REGULAR MAINTENANCE CHECKLIST 22
HOW TO LIFT AND LOWER VEHICLE FRONT 23
JOBS TO BE DONE PRIOR TO THE STORAGE 24
BRING THE VEHICLE BACK TO SERVICE FROM STORAGE 24
VEHICLE TRANSPORTATION AND TOWING 25

SAFETY INFORMATION

Observe these NOTICES, CAUTIONS, WARNINGS and DANGERS; be aware that servicing a vehicle requires mechanical skill and a regard for conditions that could be hazardous.Improper service or repair may damage the vehicle or render it unsafe.

Replace missing, damaged or unreadable safety decals immediately to prevent possible property damage, personal injury, or death. Purchase replacement safety decals from your dealer or distributor.

Know and understand the laws and regulations for vehicle operations in your area. For any questions on material contained in this manual, contact an authorized representativefor clarification.

The components of the Save LIVES package are:
Safe vehicles play a critical role in averting crashes and reducing the likelihood of serious injury.

Speed management, Leadership, Infrastructure design, Vehicle safety standards, Enforcement of traffic laws and Survival after a crash.

IMPORTANT SAFETY INFORMATION

⚠	The safety alert symbol is used to alert you for possible personal injury hazards. Obey all safetyregulations that follow this symbol to preventpossible injuries or death.
⚠ DANGER	A DANGER label identifies hazardous situations which may cause death or serious injuries.
⚠ WARNING	A WARNING label identifies hazardous situations which may cause death or serious injuries.
⚠ CAUTION	A CAUTION label identifies hazardous situations which may cause minor or moderate injuries.
NOTICE	A NOTICE label identifies hazardous situationswhich may cause property damages.

SAFETY INFORMATION

Read all the safety statements carefully before attempting any procedure.

OPERATOR WARNING DECAL

WINDSHIELD WARNING DECAL(L)

WINDSHIELD WARNING DECAL(R)

SAFETY INFORMATION

Read all the safety statements carefully before attempting any procedure.

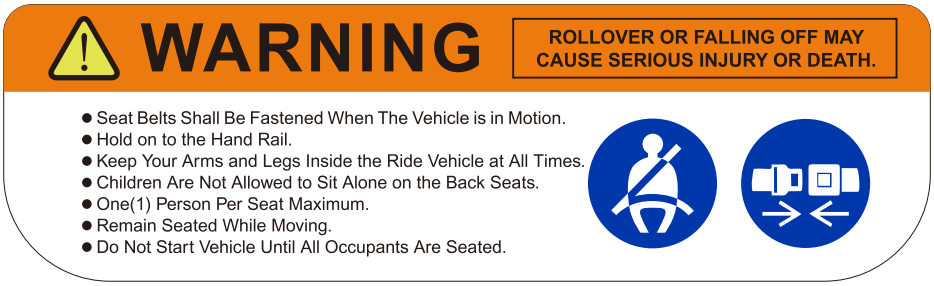

OCCUPANT WARNING DECAL

VEHICLE ROLL-AWAY WARNING LABEL

PINCH POINTS WARNING DECAL

CHARGING STAND WARNING DECAL

SAFETY INFORMATION

Read all the safety statements carefully before attempting any procedure.

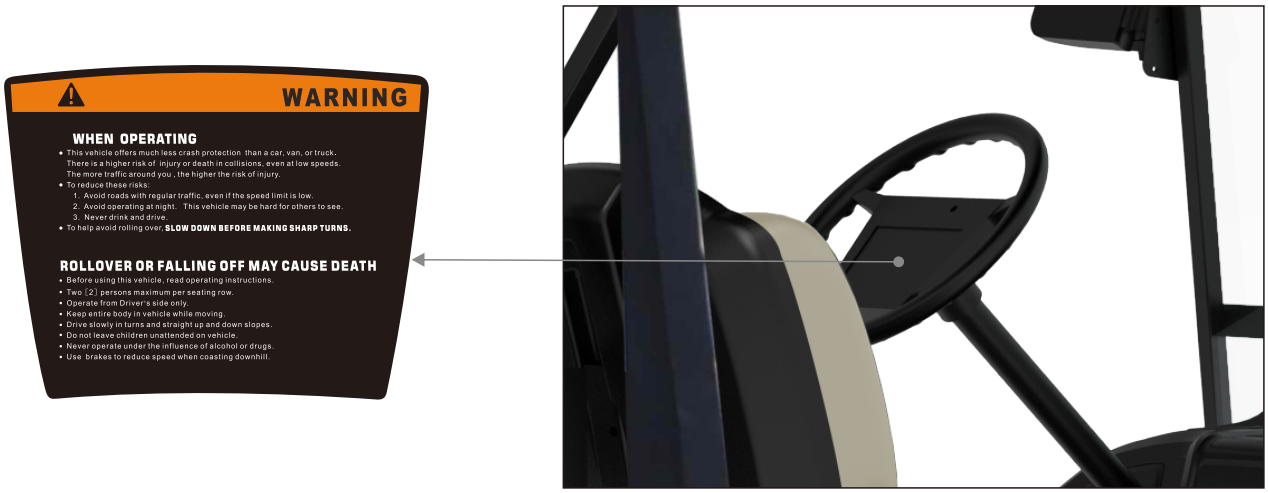

WARNING ACCIDENTAL VEHICLE MOVEMENT HAZARD. MAY CAUSE SERIOUS INJURY OR DEATH.
Before leaving the vehicle: • Engage the park brake • Set the FNR switch to NEUTRAL•
Turn the key to OFF and remove the key.

WARNING ROLLOVER OR FALLING OFF MAY CAUSE SERIOUS INJURY OR DEATH.

- Seat Belts Shall Be Fastened When The Vehicle is in Motion.
- Hold on to the Hand Rail.
- Keep Your Arms and Legs Inside the Ride Vehicle at All Times.
- Children Are Not Allowed to Sit Alone on the Back Seats.
- One(1) Person Per Seat Maximum.
- Remain Seated While Moving.
- Do Not Start Vehicle Until All Occupants Are Seated.

SAFETY INFORMATION

Read all the safety statements carefully before attempting any procedure.

SAFETY INFORMATION

Read all the safety statements carefully before attempting any procedure.

BATTERY SAFETY INFORMATION

Safety and warning labels are on the lithium battery for your protection. Read and comply with the instructions on the labels for avoiding the potential risks or injuries. if any labels shown below is damaged ,comes off or becomes illegible, contact your dealers for replacements.

While working on a li-ion battery wear protective eyeglasses and clothing

Explosion and fire hazard. The terminals of a li-ion battery are always live, therefore do not place metallic items or tools on top of a li-ion battery. Avoid short circuits.

Explosion and fire hazard. The terminals of a li-ion battery are always live, therefore do not place metallic items or tools on top of a li-ion battery. Avoid short circuits.

Batteries must not be mixed with domestic or industrial waste .

Do not open or dismantle the battery. Electrolyte is very corrosive.
If the battery casing is damaged do not touch the exposed electrolyte or powder because it is corrosive.

Do not touch any electrical components without any insulation protection.

Batteries marked with the recycling symbol must be processed via a recognized recycling agency.

Observe these instructions and keep them located near the battery for future. Read, understand and comply with all warning and instructions.

SAFETY INFORMATION

Read all the safety statements carefully before attempting any procedure.

LITHIUM-ION BATTERY DISPOSAL

- Lithium -ion batteries are recyclable.
- Lithium-ion batteries must be collected and recycled separately from other waste.
- Do not discard lithium-ion batteries as municipal waste.
- Speak with your dealer or distributor on returning or recycling used or damaged battery packs.
- Contact local or state environmental department for disposal information.

⚠ WARNING

Failure to operate the vehicles as instructed can cause collision, loss of control or roll over, resulting in severe injury or death. Follow all safety warnings or labels in this owner manual. All operator must read, understand and comply with these warnings and labels before operating the vehicles. Follow the safety information and operating procedures described.

• Operate your vehicle responsibly to prevent dangerous conditions for the operator, passengers and other people in the area of operation
• Operate your vehicle responsibly and keep the vehicle in safe condition of operation
• The driver must keep both hands on the steering wheel and both feet on the floor or pedals.
• Inspect the vehicle before each use to make sure it is in safe operating condition. Perform the daily inspection described in this manual.
• Always have the vehicle checked by an authorized dealer if it is involved in an accident.
• Remove the key when the vehicle is not in use to prevent accidental starting or unauthorized use.
• Drive the vehicle at appropriate speeds for the terrain and conditions. Be aware of environmental
conditions that change the terrain and your ability to control the vehicle.
• Do not drive on excessively steep hills. Evaluate the terrain before descending a hill. Drive slowly and deliberately. Use the brake to limit speed and maintain control. Sudden braking or turning can cause loss of vehicle control. Drive straight up or down the hill; do not drive across the hill.
• Operate only in approved areas. Follow all applicable safety rules for the area.

Be familiar with vehicle features before attempting any operations.

VEHICLE SERIAL NUMBERS

All vehicles have serial numbers on the left side of the chassis frame. The first four numbers are the manufacturing year of the vehicle, the other five numbers are the vehicle's serial number given by Electric Vehicles. All the vehicles are documented. After the vehicles are sold out of the factory, corporation will track the vehicles by using the vehicle's serial number as identity. Serial numbers are warranty insurance from corporation. Customers should be aware of the importance of vehicle serial numbers.

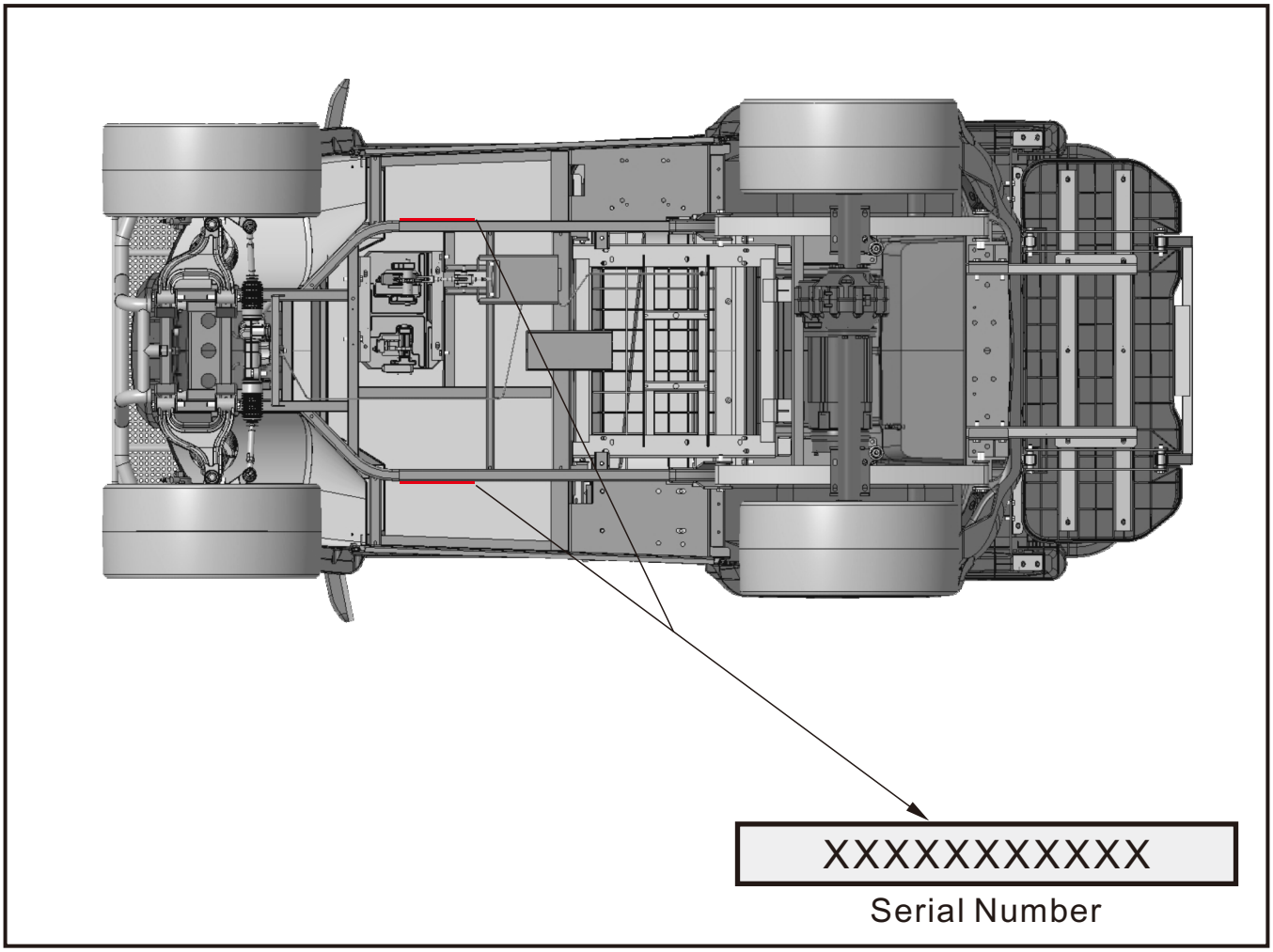

Design changes occur on a continuous basis. In order to get the correct components for Vehicles, the correct serial number and vehicle model must be supplied. The warranty might become invalid due to missing serial numbers .
Please contact dealer and provide the adequate purchase documents for warranty and get a new serial number plate as soon as possible.

VEHICLE FEATURES

Be familiar with vehicle features before attempting any operations.

MARSHELL UTILITY CART

DU-CJ500-2

- 4-seater cargo utility vehicle, plastic body. Drive configuration: 72V AC, 6.3kW
- 72V/6.3kW AC motor, 72V 450A AC controller, 72V/35A charger
- Front disc & rear drum hydraulic brake, foot-operated parking brake

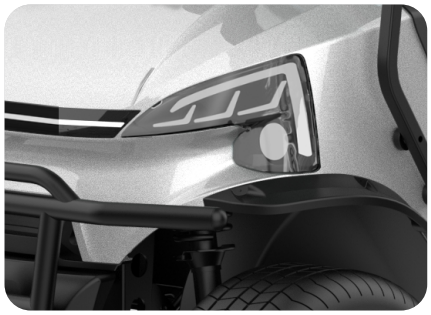

VEHICLE FEATURES

Be familiar with vehicle features before attempting any operations.

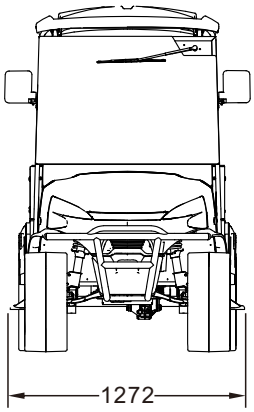

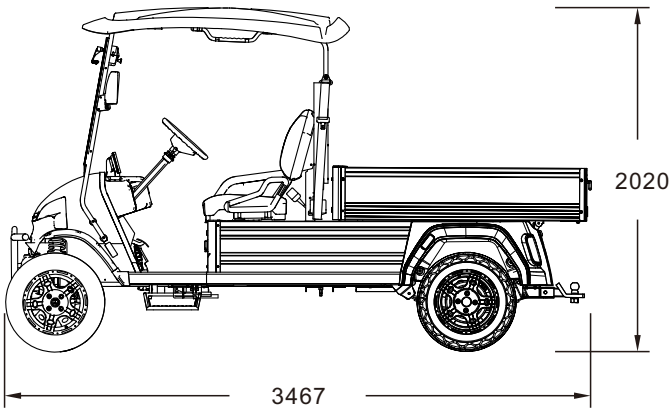

SPECIFICATION SHEET OF DU-CJ500-2

GENERAL SPECIFICATION			
Battery	70.4V150A lithium battery	Overall dimensions	3467*1272*2020MM
Controller	450A controller	Max. loading weight	650kgs
Motor	72V/6.3KW LK-YS175-H7263QD	Net weight	560kgs
Charger	72V35A charger	Chassis	Steel
Accelerator	Inductance Accelerator (0-5V)	Wheel base	2430mm
DC Converter	DC472V-12V/30A	Front wheel Tread	960mm
Suspension	McPherson coil spring	Rear wheel Tread	1010mm
Steering	" Rack & Pinion" Steering	Braking distance	6m
Brakes	Front wheel disc brake & Rear wheel Mechanical Drum Brake with foot parking	Tires and rim	Tire: 225/55B-12 Rim: 12*7 ET:-10
Passenger capacity	2	Minimum turning radius	5m
Load range	60 km (Full load)	Minimum ground clearance	170mm (No load) 160mm (Full load)
Max. speed	40km/h (No load) 30km/h (Full load)	Max. climbing ability	20% (No load) 15% (Full load)

VEHICLE FEATURES

Be familiar with vehicle features before attempting any operations.

STANDARD CONFIGURATION

Display	Optional:7 inch display, 10 inch display, with backup camera
Body	Plastic front and rear bodys.
Roof	Injection -Black
Rear end	Gear ratio 14:1
Seat	Spandex Leather covered seats, foaming.
Windshield	E-mark certification One piece organic windshield
Rear cargo	1500*1150*310 mm 500 KGS payload ,Auto Tipping

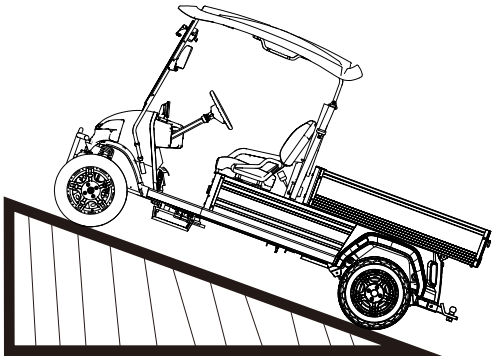

Max. climbing ability
20% Grade

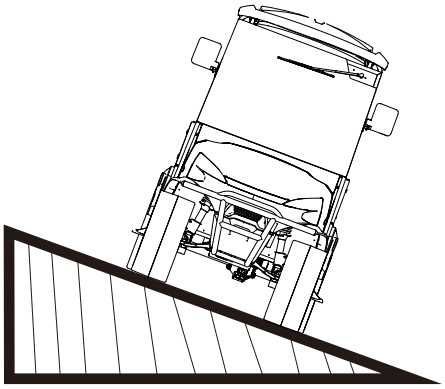

Recommended Max Side Tilt
21.8% Grade

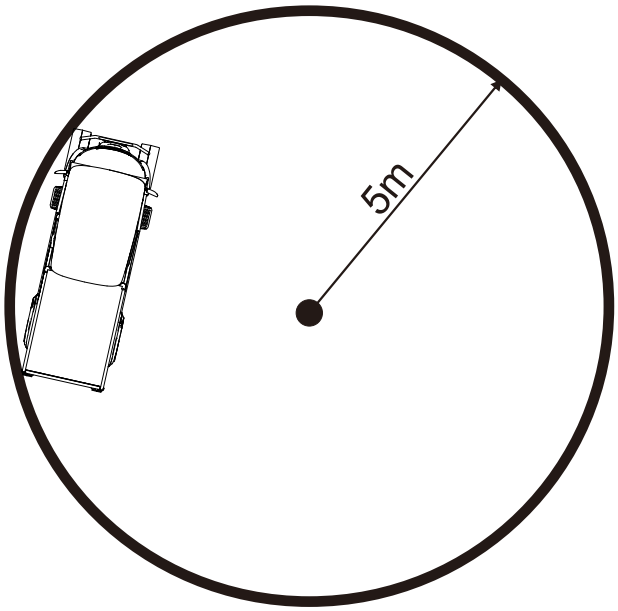

Minimum turning radius

VEHICLE FEATURES

Be familiar with vehicle features before attempting any operations.

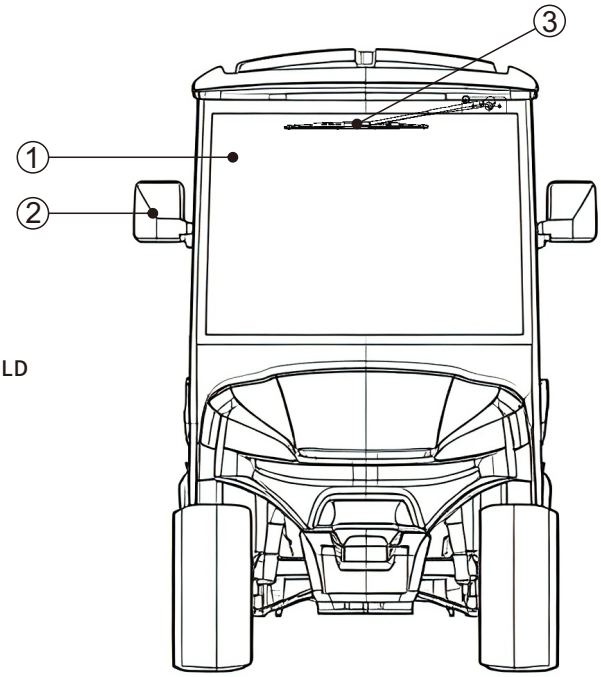

1.E-MARK CERTIFICATION ONE PIECE ORGANIC WINDSHIELD

2.REAR VIEW MIRRORS WITH TURN SIGNAL INDICAT ORS

3.WINDSHIELD WIPER

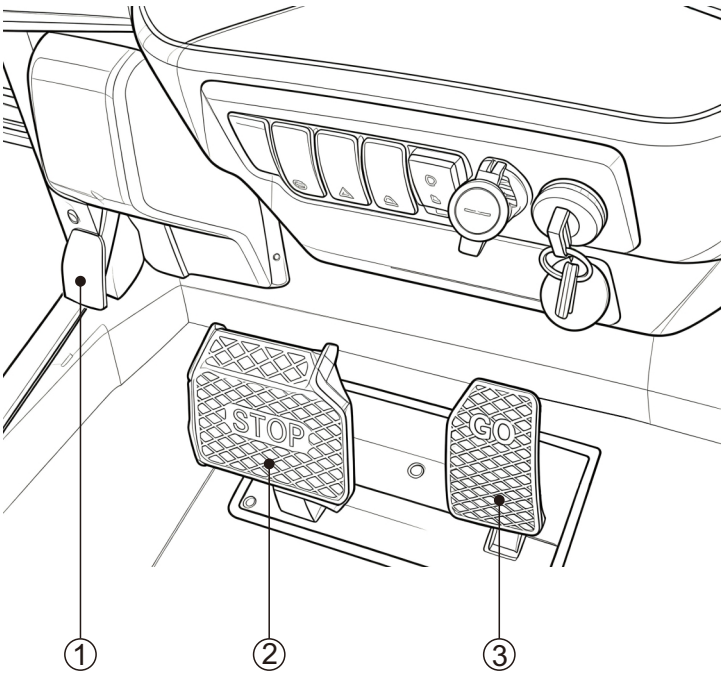

4.PARK PEDAL

5.BRAKE PEDAL

6.ACCELERATOR PEDAL

VEHICLE FEATURES

Be familiar with vehicle features before attempting any operations.

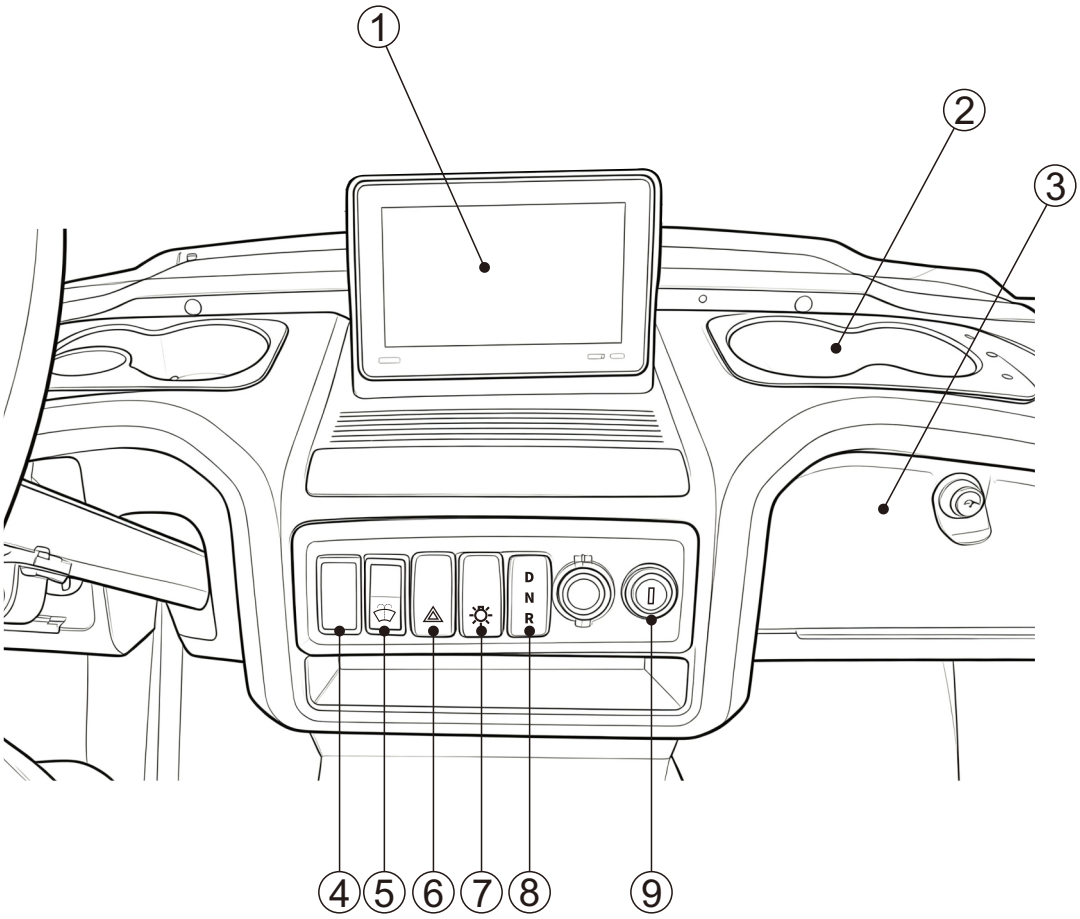

1.7 INCH DISPLAY 2.CUP HOLDERS 3.GL OVE BOX WITH L OCKS 4.HIGH-LOW SPEED SWITCH (OPTIONAL)
5.WIPER SWITCH 6.HAZARD WARNING LIGHT SWITCH 7.HEADLIGHT SWITCH 8.GEAR SWITCH
9.KEY SWITCH

KEY SWITCH

This is the normal park position. The key can only be removed in this position.

Turn the key to this position to activate all vehicle power supplies.

GEAR SWITCH

Vehicle forward and reverse are controlled by the forward/reverse switch.Press D for forward, press R for reverse. Middle N position is neutral.

OPERATION AND CONTROLS

Be familiar with vehicle features before attempting any operations.

DANGER

OPERATING THE VEHICLE WHILE OCCUPANTS ARE NOT FULLY SEATED CAN CAUSE SERIOUS PERSONAL INJURY OR DEATH. START THE VEHICLE ONLY WHEN ALL OCCUPANTS ARE FULLY SEATED.
FALLING OBJECTS CAN CAUSE PROPERTY DAMAGE, SERIOUS PERSONAL INJURY, OR DEATH.
DO NOT OPERATE THE VEHICLE WHERE THERE IS A RISK OF FALLING OBJECTS. DO NOT LET A PASSENGER HOLD A CHILD ON THEIR LAP WHILE THE VEHICLE IS IN OPERATION.DO NOT LET PASSENGERS RIDE IN THE VEHICLE OR TRAILER BEING TOWED.

WARNING

KEEP AWAY FROM DROP-OFFS, STEEP SLOPES, AND UNSTABLE SURFACES.
SUDDEN STARTS, STOPS, AND TURNS CAN CAUSE PROPERTY DAMAGE AND SERIOUS PERSONAL INJURY. PREVENT SUDDEN STARTS, STOPS, AND TURNS. FAILURE TO CORRECTLY MAINTAIN THE VEHICLE AND MAKE NECESSARY REPAIRS CAN DECREASE VEHICLE PERFORMANCE, CAUSE A FIRE, PROPERTY DAMAGE, SERIOUS PERSONAL INJURY,OR DEATH. IF PROBLEMS ARE FOUND DURING SCHEDULED INSPECTION OR SERVICE,OPERATE THE VEHICLE ONLY WHEN REPAIRS ARE MADE.
MAKE SURE THAT ALL PASSENGERS CAN SECURE THEMSELVES IN THE VEHICLE BEFORE VEHICLE OPERATION. TO PREVENT SERIOUS PERSONAL INJURY, KEEP ENTIRE BODY IN THE VEHICLE DURING OPERATION.
THE VEHICLE IS NOT SPECIALLY EQUIPPED FOR HANDICAPPED PERSONS.
BEFORE VEHICLE OPERATION, MAKE SURE THAT ALL PERSONS COMPLY WITH THE WARNINGS AND OPERATING INSTRUCTIONS. INCORRECT OPERATION OF THE VEHICLE CAN CAUSE DECREASED VEHICLE PERFORMANCE, PROPERTY DAMAGE, SERIOUS PERSONAL INJURY, OR DEATH.
TO PREVENT FALLS FROM THE VEHICLE, PASSENGERS MUST STAY SEATED AND ALWAYS HOLD ON TO HAND HOLDS OR HANDRAILS WHEN THE VEHICLE IS IN OPERATION. THE DRIVER MUST KEEP BOTH HANDS ON THE STEERING WHEEL WHEN THE VEHICLE IS IN OPERATION.
A SHARP TURN AT HIGH SPEEDS CAN CAUSE A ROLL-OVER, FALL, PROPERTY DAMAGE, AND SERIOUS PERSONAL INJURY. OPERATE THE VEHICLE SLOWLY IN TURNS. UNINTENDED VEHICLE OPERATION CAN CAUSE SERIOUS PERSONAL INJURY OR DEATH.
BEFORE LEAVING THE VEHICLE OR DURING VEHICLE MAINTENANCE, DISABLE THE VEHICLE.
THE VEHICLE IS NOT DESIGNED TO MEET CHILD SAFETY SEAT COMPATIBILITY REQUIREMENTS. CHILDREN REQUIRING A CHILD SAFETY SEAT MUST NOT RIDE ON THE VEHICLE. COMPLY WITH STATE AND LOCAL LAWS PERTAINING TO CHILD SAFETY.

CAUTION

OPERATE THE VEHICLE ONLY FROM THE DRIVERS SEAT.
OPERATE THE VEHICLE ONLY IN SPECIFIED AREAS.
ONLY AN AUTHORIZED LICENSED DRIVER CAN OPERATE THE VEHICLE.
ONLY OPERATE THE VEHICLE IN COMPLIANCE WITH LOCAL AND STATE LAWS.
USE CAUTION WHEN OPERATING THE VEHICLE IN THE PRESENCE OF HIGHER-SPEED VEHICLES, IN CONGESTED AREAS, OR ON UNIMPROVED SURFACES.

Be familiar with vehicle features before attempting any operations.

PRE-OPERATION SAFETY AND PERFORMACE INSPECTION

Use the pre-operation checklist to inspect the operational conditions and performance of the vehicle. If bad operational conditions are found on a vehicle, stop operations. Removal from operation can prevent Further damages to the vehicle or serious injuries . If the vehicle is not in an operate-able condition, inquire your dealer for maintenance or repairs.

PRE-OPERATION CHECKLIST

INSPECTION ITEMS	INSPECTION PROCEDURES
BATTERY	Before initiate using vehicle, the batteries should be fully charged, Replace the bad/broken/damaged parts during inspection.
BRAKE	Check the brake pedal , when stepped it should be flexible and feels firm. And it returns to its original position with flexibility when released.
ACCELERATOR PEDAL	Check the accelerator pedal ,when stepped and released it should return to its original position with full flexibility.
TIRES	Check the tires' pressure, pressure is around 20psi. Check tires surface, remove any embedded objects you can find. Be sure no cracks or other damages to the tires ,defective tires may cause accident while driving.
STEERING	Pull the steering wheel up and down ,check the tightness of steering wheel .Rotate the steering wheel right and left. Be sure no excessive free play and rattling sound .
REVERSER WARNING BEEPER	Check the reverse beeper, when the direction selecting switch be set at "REV", it should beep soundly.
LIGHTS	Check the signal lights, the brake lights and turning lights should be in proper working condition.

Be familiar with vehicle features before attempting any operations.

7 inches Speedometer

NOTICE

1. When OBD Lights, Short press "SEL" Key ,the screen will show the Malfunction Detail; Short Press Again, then Quit the Malfunction screen
2. The "READ" Lights OFF When the Carts is in Driving Or Malfunction.
3. The Brake Malfunction Lights ON Only the carts connected with a switch sensor hydraulic brake oil reservoir;

Dimension:

Connection Port:

RCA Male Plug Yellow Color

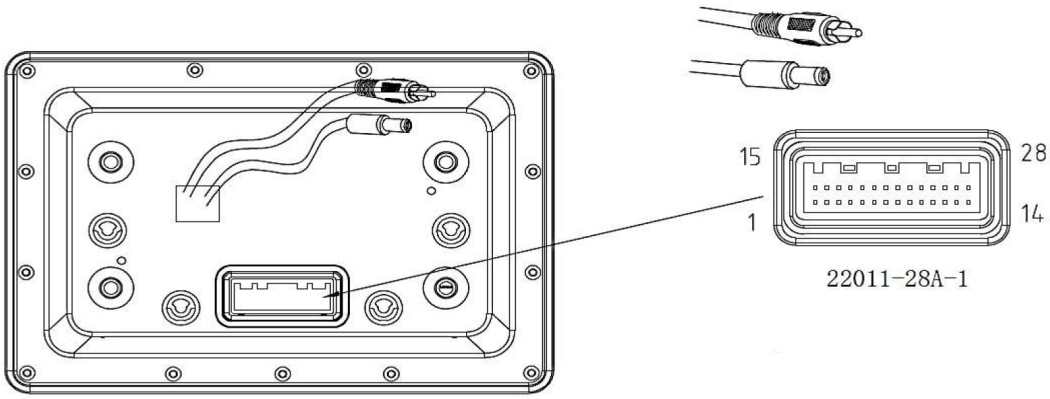

TOUCHSCREEN MANUAL

Be familiar with vehicle features before attempting any operations.

FEATURE OF EACH ICON ON SCREEN

1.Temperature 2.Battery Capacity Indicator Percentage Display <=10%, Red Color Display

3.Left Turning Indicator 4.Brake Malfunction Lights 5.OBD Lights 6.Parking Indicator

7.Position lights 8.High Beam Lights 9.Right Turning Indicator 10.Speed Display

11.Motor Temperature 12.In Reverse Gear, Letter "R" lights on

13.In Neutral Gear, Letter "N" lights on 14.In Drive Gear, Letter "D" lights on

15.Press For KM/Miles Switch 16.High speed/low speed

BATTERY CHARGER

Be familiar with vehicle features before attempting any operations.

⚠ WARNING

INCORRECT CONNECTION OF THE AC CORD CAN CAUSE A FIRE OR AN ELECTRICAL SHOCK. DO NOT USE AN ADAPTER TO CONNECT THE AC CORD INTO A TWO-PRONG POWER SOURCE. CONNECT THE AC CORD TO AN APPROVED POWER SOURCE. CONNECTION OF THE AC CORD TO AN INCORRECT RECEPTACLE CAN CAUSE A FIRE, ELECTRICAL SHOCK, PROPERTY DAMAGE, SERIOUS PERSONAL INJURY, OR DEATH. CONNECT THE AC CORD TO AN APPROVED POWER SOURCE AND RECEPTACLE. DO NOT LET THE BATTERY CHARGER BECOME WET. KEEP THE BATTERY CHARGER DRY.

CHARGER SPECIFICATION

Battery pack rated voltage Maximum charger ouput AC input voltage range AC input current value	51.2V 58.4V 100-240VAC, 50-60Hz 11.5A@120VAC, 6.1A@220VAC
Power factor Charger efficiency Noise IP Class Weight	0.99 95% 45dB IP67 9.3lb (4.2kg)
Operating temperature Storage temerature	-86

Be familiar with vehicle features before attempting any operations.

HOW TO USE CHARGER

⚠ WARNING

TO DECREASE THE POSSIBILITY OF ELECTRICAL SHOCK OR ELECTROCUTION, MAKE SURE THE CHARGER PLUG IS NOT DAMAGED. THE POWER AC CORD HAS A PLUG WITH GROUND POST. DO NOT MOVE, CUT OR BEND THE GROUND POST.

1. Inspect the charger cord to check if there is broken on damaged on the power AC cord and cable. Replace the broken AC power cord.
2. Plug the AC charge handle into the vehicle receptacle completely.
3. Plug the Power AC cord into the ground power completely.
4. The charger will automatically start in several seconds after plugging in the AC power cord.
5. The charger will automatically stop when the batteries are fully charged.

6- Remove the AC charge cord before operating the vehicle.

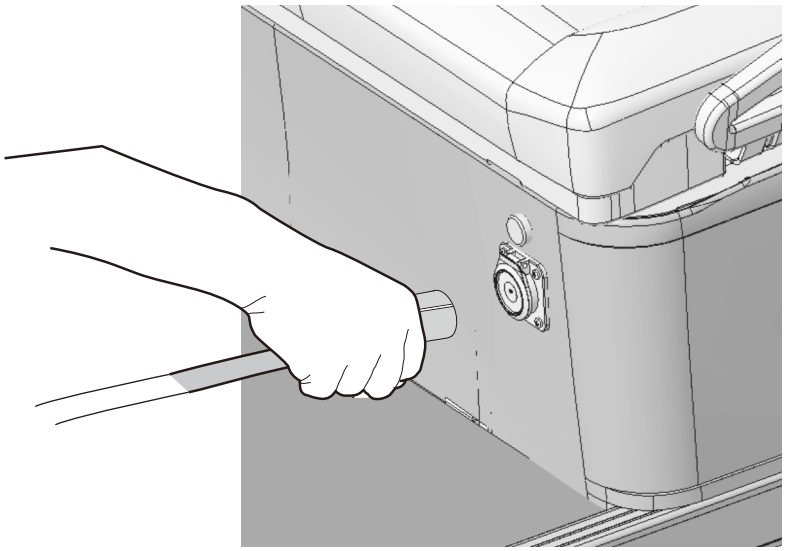

Be familiar with vehicle features before attempting any operations.

CHARGER MAINTENANCE

WARNING

IF THE PLUG PINS ARE BENT, SPEAK WITH YOUR LOCAL DEALER OR DISTRIBUTOR FOR REPLACING. DO NOT TRY TO REPAIR THE AC CORD PLUG OR PINS.

ELECTRICAL CORDS

Examine electrical cords for wear and damage before use. Immediately replace electrical cords for:

- Cracks
- Cuts
- Frayed wiring
- Insulation damage
- Loose connections
- Splices

Examine electrical plugs for wear and damage before use. Immediately replace electrical plugs for:

- Bent pins
- Corrosion
- Cracks
- Loose connections
- Missing pins

ELECTRICAL PLUGS AND RECEPTACLES

CLEAN THE ELECTRICAL PLUGS AND RECEPTACLES

1. Disconnect the AC cord from the power source.
2. Disconnect the AC cord from the battery charger.
3. Disconnect the DC cord from the vehicle charger receptacle.
4. Apply electrical contact cleaner to the electrical plugs and receptacles. Refer to the manufacturer instructions.
5. Clean the electrical plugs and receptacles.

Be familiar with vehicle features before attempting any operations.

WHEELS &TIRES

WARNING

DO NOT OVER INFLATE THE TIRES. EXCESS PRESSURE CAN CAUSE THE TIRE EXPLODE.
TO DECREASE THE RISK OF TIRE EXPLOSION, ADD SMALL AMOUNTS OF AIR TO THE TIRE AT INTERVALS TO SEAT THE TIRE BEADS. OVER INFLATION OF SMALL TIRES CAN OCCURS IN A FEW SECONDS.
PROTECT FACE AND EYES WHEN REMOVING THE TIRE VALVE CORE.
USE ONLY SOCKETS MADE FOR IMPACT WRENCHES TO DECREASE THE RISK OF INJURY CAUSED BY A BROKEN SOCKET.
DO NOT USE TIRES THAT HAVE INFLATION PRESSURE LESS THAN THE TIRE PRESSURE RECOMMENDED.

Always follow the cross-sequence pattern when you install the lug nuts to make sure the wheel is evenly seated against the hub.

NOTICE

Tools list
Lug Wrench, M12.....1
Impact Wrench.....1
Impact Socket, M12.....1
Torque Wrench.....1

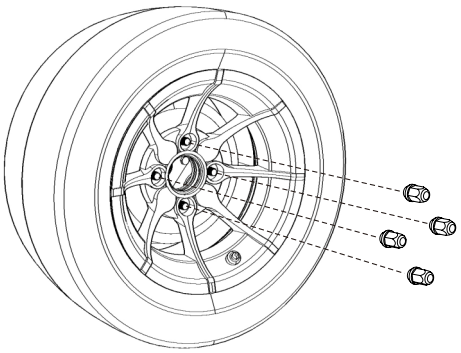

The general recommended tire inflation pressure is 20 psi, but the tire inflation pressure can be changed according to the specific terrain condition.
All four tires must have the same pressure for the best control qualities. Always put the valve stem cap back after checking or inflate the tires.
Use a tire plug to repair small holes in the thread part of the tires. For large holes or cuts,replace the whole tire.

Be familiar with vehicle features before attempting any operations.

Regular Maintenance Checklist

Note: Be familiar with vehicle features before attempting any operations. Regular maintenance is required for the best performance and safe operation of the electric vehicle. Periodic maintenance must be performed accordingly.

Maintenance Frequency Legend
1D = Daily 1W = Weekly 1M = Monthly 1Q = Quarterly 6M-1Y = Every 6 Months to Annually
Maintenance Type Legend
Consumer User maintenance items for regular inspection and basic care
Dealer Professional maintenance items for qualified technicians

Maintenance Item	Description	1D Daily	1W Weekly	1M Monthly	1Q Quarterly	6M-1Y 6 Months to Annually
Battery System Maintenance						
Battery	Consumer Maintenance 1. Check for any damage to the battery surface.			✓		
	Consumer Maintenance 2. Charge the battery.	✓				
	Consumer Maintenance 3. Tighten the nut on the battery cable.			✓		
	Dealer Maintenance 4. Check the SOH (State of Health) of the battery.	✓				
	Dealer Maintenance 5. Clean the surface of the battery.				✓	
Charger Maintenance						
Charger	Consumer Maintenance 6. Observe the charging status; check if the charger plug becomes hot.	✓				
	Dealer Maintenance 7. Clean the surface of the charger. Do not let water enter the charger.					✓
Motor and Controller Maintenance						
Motor and Controller	Dealer Maintenance 8. Check whether all terminals are tightened properly (Turn off the power before inspection).					✓
	Dealer Maintenance 9. Clean the surface of the controller.					✓
	Dealer Maintenance 10. Check whether the solenoid is in order; inspect the contact point.					✓
	Dealer Maintenance 11. Check whether water has entered the motor.					✓
	Dealer Maintenance 12. Check whether all connectors for the motor & controller are tightened.					✓
	Dealer Maintenance 13. Check whether the accelerator pedal operates properly.					✓

Be familiar with vehicle features before attempting any operations.

Chassis and Body Maintenance						
Chassis and Body	Consumer Maintenance 14. Check tire pressure and tire surface condition.					✓
	Dealer Maintenance 15. Check whether the brake pedal is firm and releases freely.					✓
	Dealer Maintenance 16. Inspect the brake drum and brake shoe for replacement need.					✓
	Dealer Maintenance 17. Check the hand brake function.					✓
	Dealer Maintenance 18. Check the brake fluid reservoir level.					✓
	Dealer Maintenance 19. Check whether the shock absorber is leaking.					✓
	Dealer Maintenance 20. Fasten the shaft bolts.					✓
	Dealer Maintenance 21. Check whether the rear axle gearbox has sufficient oil.					✓
	Dealer Maintenance 22. Add grease to the front hub and steering gearbox.					✓
	Dealer Maintenance 23. Adjust the front and rear suspension.					✓
	Dealer Maintenance 24. Clean the body and seats.					✓

HOW TO LIFT AND LOWER VEHICLE FRONT

How to lift the front of the vehicle only:

1. Install wheel chocks in front and behind each front wheel.
2. Place the jack under the center front just behind the bumper.
3. Lift the vehicle and place two jack stands under the frame where the instrument panel support is attached to the frame.
4. Lower the jack and test the stability of the vehicle on the jack stands.

Lower the vehicle:

1. Lift the vehicle enough to remove the jack stands.
2. Carefully lower the vehicle to the ground with the jack.

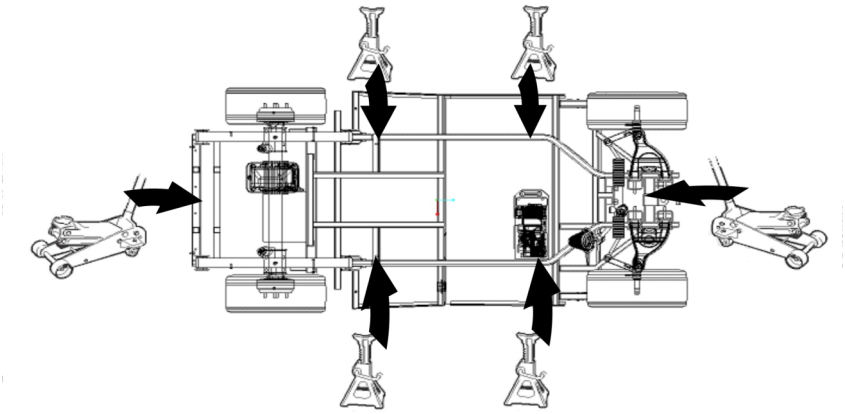

Be familiar with vehicle features before attempting any operations.

JOBS TO BE DONE PRIOR TO THE STORAGE

>Put golf cart under shelter, keep the golf cart in dry and ventilated space. Optimal temperature 14°F to 95°F (-10°C to 35°C) . Maximum storage temperature should not be higher than 122 °F (50°C).
>Turn the key switch to the OFF position, remove the key and leave the forward/reverse switch in the NEUTRAL position during storage.
>Power down all accessories.
>Clean the battery packs, tops and terminals using a battery acid neutralizer (1 cup baking soda per 1 gallon water).Check, clean and treat battery terminal connections with a battery terminal protector spray.
>Disconnect batteries per ensuring that the cables do not come into contact with a terminal (Disconnect the 48V Main power outlet cables from battery pack, insulate the cable).
>Connect Battery cables back to system, charge the battery to full state every 1-3 months to keep battery alive without damages caused by over-discharging.
>Perform all semi-Annual Lubrications.
>Thoroughly clean the front and rear body, seats, battery compartment and underside of the vehicle.
>DO NOT engage the park brakes, but secure the golf cart from rolling. Check the wheels with wheel stopper or something similar .
>Check Tire pressure and inflate the tires to standard pressure level as values presented on tires.
>Thoroughly clean the front and rear body, seats, battery compartment and underside of the vehicle.

BRING THE VEHICLE BACK TO SERVICE FROM STORAGE

1. Fully charge the battery.
2. Set the Forward /Reverse control (DNR) to N.
3. Adjust the pressure in each tire to the recommended tire pressure.
4. Have a trained technician lubricate the vehicle.
5. Do a daily pre-operation safety checklist.
6. Do a vehicle performance inspection.

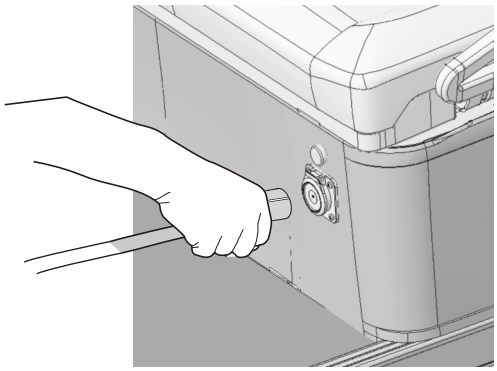

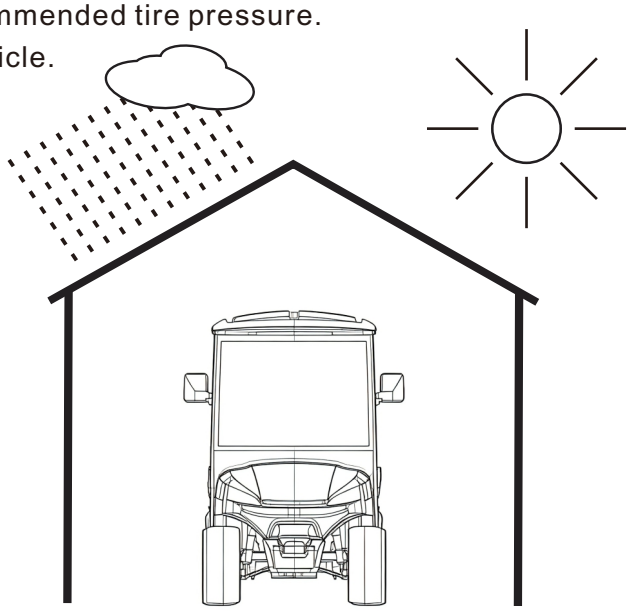

Be familiar with vehicle features before attempting any operations.

VEHICLE TRANSPORTATION AND TOWING

⚠ WARNING

DO NOT RIDE ON OR ALLOW OTHER PEOPLE ON A VEHICLE BEING TRANSPORTED ON A TRAILER OR BEING TOWED WITH ANOTHER VEHICLE.
DO NOT CARRY PASSENGERS ON GOLF CART WHILE TOWING THE VEHICLE.
APPLY BRAKE TO LIMIT SPEED WHEN TOW THE GOLF CART ON UNEVEN TERRAIN.
TURN ON THE HAZARD LIGHTS IF VEHICLE WAS CONFIGURED WITH.
APPLY BRAKE TO LIMIT SPEED WHEN COMMIT SHARP TURNS.
SECURE THE SEATS/WHINSHIELD /OTHER LOOSE ITEMS BEFORE TOWING GOLF CART.
DO NOT TOW MULTIPLE GOLF CARTS IN SERIES FORMATION.
DO NOT TOW THE GOLF CART ON HIGHWAY ROADS.
ABORT TOWING WHEN ABNORMAL PHENOMENONS BEING DETECTED.

The following steps can help you to tow an golf cart safely without any damage.
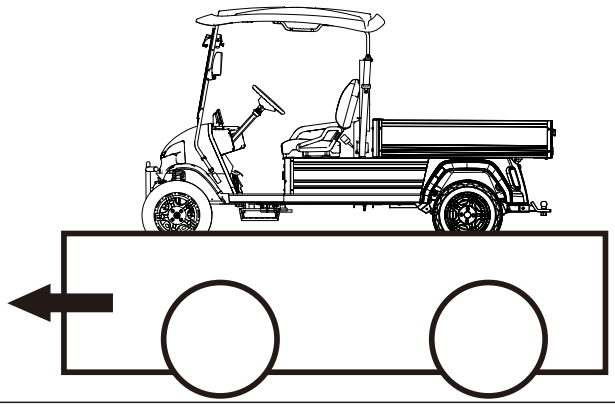
Turn off key switch.
Keep the Forward/Reverse switch in a neutral position.
If you need to tow the golf cart for long distance ,remove the battery connections from battery pack terminals. This is done to ensure that the Rear axle/Motor/Controller/Batteries do not get damaged during the towing process.
Move the golf cart at a slower speed (Optimally Between 5-15MPH)or the same speed that you would generally move it if it has power. Exceeding the speed limit can over-spin themotor and ruin it.
Pulling your golf cart at a speed faster than its design limit will overspin the motor. This may fling internal components apart and destroy the motor entirely.When towing your golf cart, you must mechanically unlock the EM brake on the cart's motor beforehand.